KNOWLEDGE

ASSOCIATED SHEETS

Inputs & Outputs
Measure voltage

ANALOG INPUTS

How the Arduino board measures electrical voltage

The Arduino board Uno has 6 analog inputs, A0, A1,.. , A5.
An analog input is a voltmeter: the board measures the difference in potential between the wire that connects the analog input and the potential of the GND port.

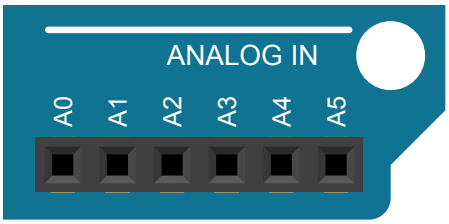

That being said, the microcontroller can only work with numbers; it will therefore convert the measured voltage into a number. It is the work of the analog/digital converter called "ADC". The ADC of the Arduino board works on 10 bits: It accepts as input a voltage comprised of between 0 V and V_{ref} (a reference voltage) and supplies the microcontroller with a number comprised of between 0 and 1023 (that is to say 2^{10} - 1).

- For a voltage of 0V (or less), the ADC returns the value 0.
- For a voltage of V_{ref} (or more), the ADC returns the value 1023.
- For an intermediary voltage, the ADC returns an integer of between 0 and 1023 following a linear scaling law.

The V_{ref} is 5 V by default but this value can be changed in the program (see the instruction "analogReference" on the arduino.cc site for more details).

Be careful, a voltage superior to 5.5 V can destroy the Arduino board.

Usage examples

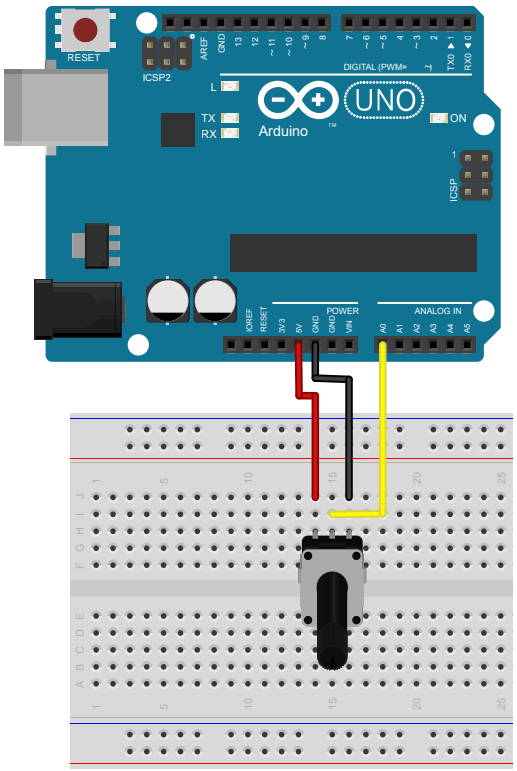

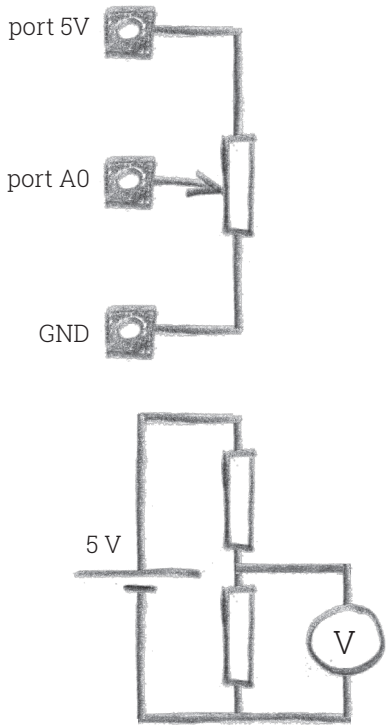

The setup above allows you to measure a voltage modified by a potentiometer comprised of between zero and five volts. This setup is equivalent to a voltage divider (see the equivalent diagram).

Programming

```
int sensorValue ;                    // integer type variable
float VoltageInVolts ;               // decimal type variable

sensorValue = analogRead(A0);        // analogRead(A0) is the function that
       // returns an integer of between 0 and 1023, corresponding
       // to the voltage applied to the port A0 ;
       // sensorValue is an integer comprised between 0 and 1023.

VoltageInVolts = analogRead(A0) * 5.0 / 1023.0 ;
       // converts the value read by the ADC in volts,
       // supposing that Vref is 5 V (the default value).
```